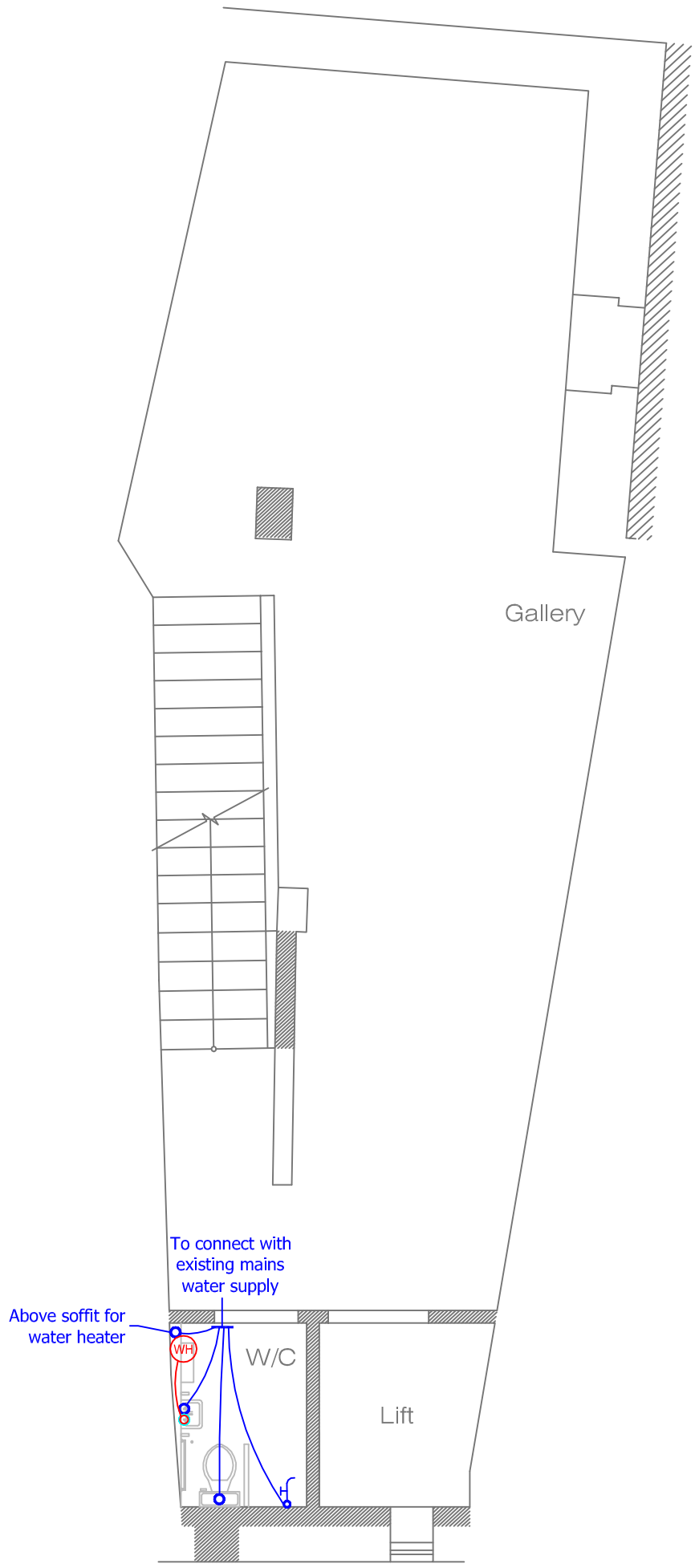

Basement Floor Plan
Scale 1:100

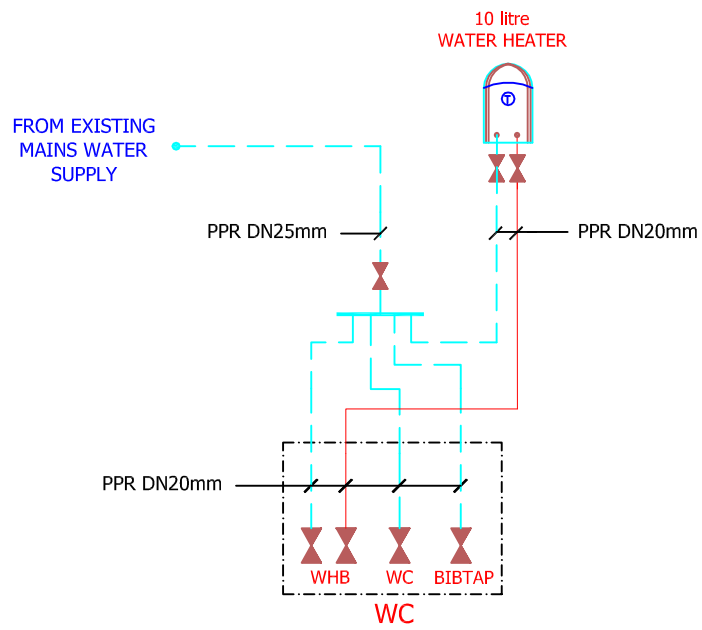

Plumbing schematic layout
NTS

LEGEND

	Cold water point
	Hot water point
	Bibtap
WH	Water heater
	Cold water header

NOTES

THIS DRAWING IS THE SOLE PROPERTY OF GALEA CURMI ENGINEERING CONSULTANTS AND MUST BE USED ONLY FOR THE PURPOSE FOR WHICH IT WAS INTENDED. THIS DRAWING MUST NOT BE COPIED OR DISCLOSED TO ANY OTHER PARTY WITHOUT THE PRIOR WRITTEN CONSENT OF GALEA CURMI ENGINEERING CONSULTANTS.

DO NOT SCALE THIS DRAWING AS A BASIS OF MEASUREMENT.
ALL DIMENSIONS MUST BE VERIFIED BY CONTRACTOR.
THIS DRAWING MUST BE USED IN CONJUNCTION WITH ALL OTHER DRAWINGS AND DOCUMENTS FORMING PART OF THIS PROJECT.
THE ENGINEER MUST BE INFORMED ABOUT ANY CONTRADICTION OR DISCREPANCY BEFORE WORK IS STARTED.

REV	AMENDMENTS	DATE

GALEA CURMI ENGINEERING
The Duke, Level 3, Republic Street
Victoria, Gozo VCT1017
Tel : 2755 9552, 21569552
Mob: 7971 0333, 7971 0345
E-mail: info@galeacurmi.com

JOB TITLE
M&E systems at Cittadella Museum

CLIENT
Mons. Tarcisjo Camilleri

DESCRIPTION
Plumbing System Layout

DESIGNED	DRAWN	CHECKED
Alan Xuereb	Alan Xuereb	Ing. Renzo Curmi

DRAWING No	REVISION No	SCALE	DATE
4700/27	0	1:100	23.03.2018